TLP HL

INSTALLATION MANUAL
MONTAGEANLEITUNG
MANUALE DI MONTAGGIO
MONTERING SANVISNING
MONTAGE ANVISNING
MONTAGE VEJLEDNING
ИНСТРУКЦИЯ ПО МОНТАЖУ
INSTRUKCJA MONTOWANIA
MONTĀŽAS INSTRUKCIJA
MONTAVIMO INSTRUKCIJA
MONTAGEHANDLEIDIG
ASENNUSOHJEET

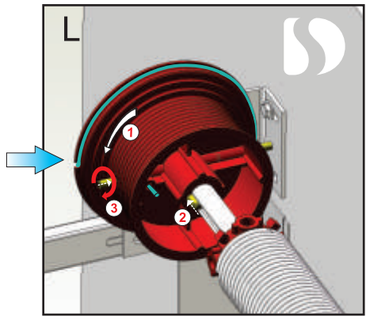

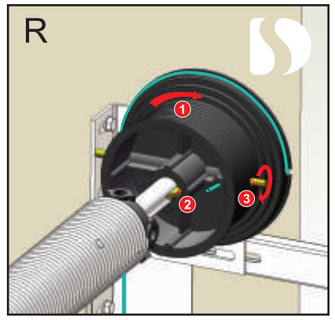

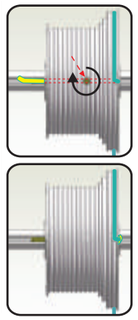

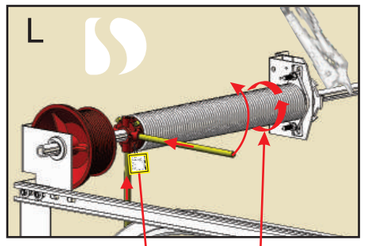

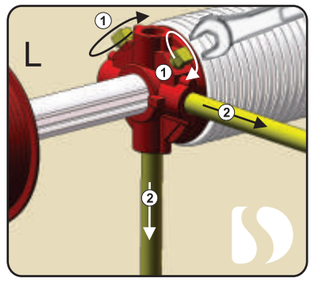

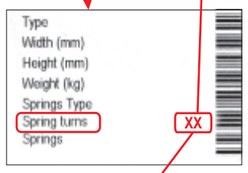

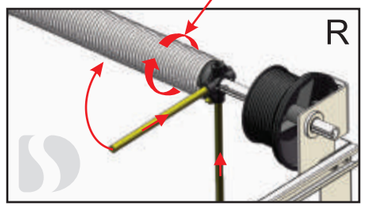

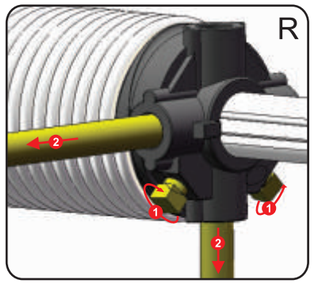

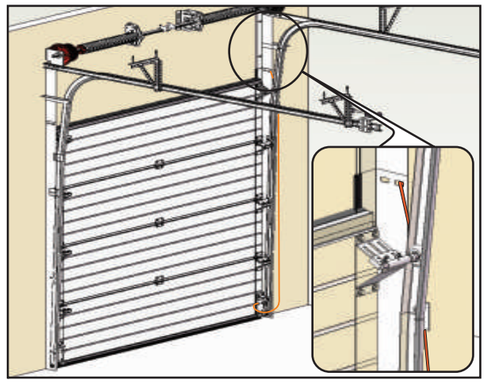

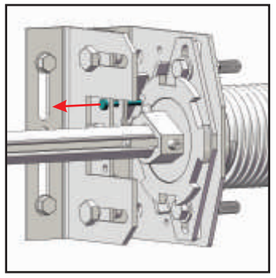

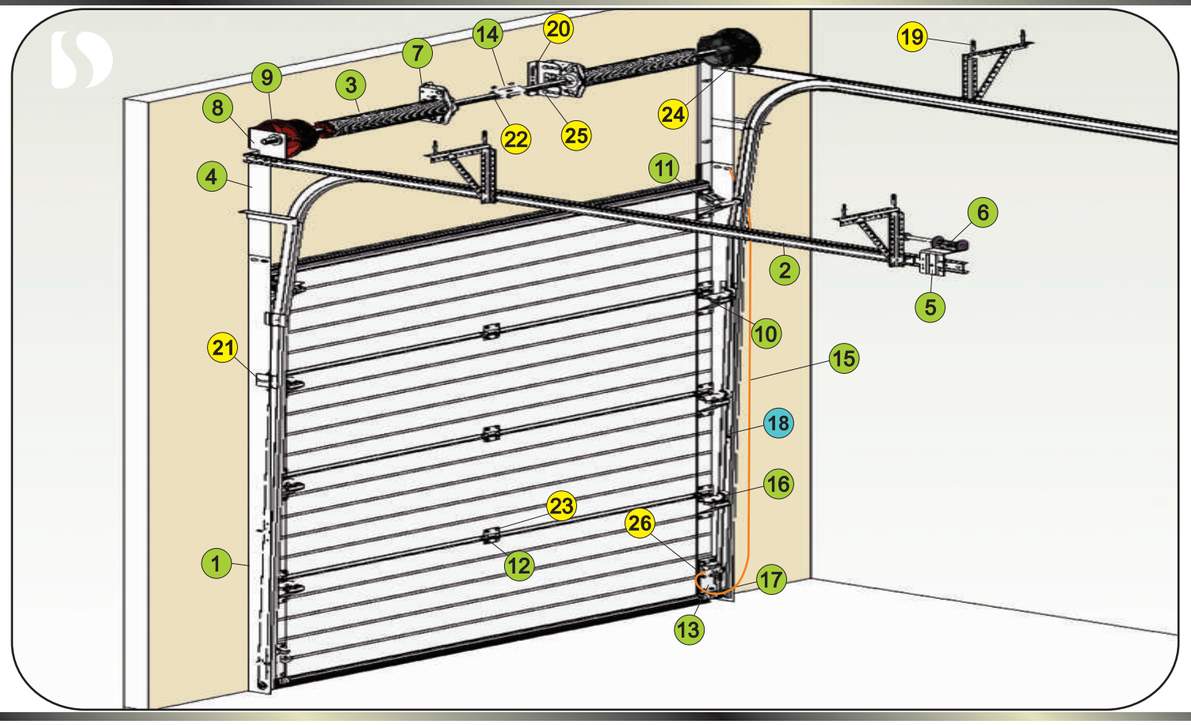

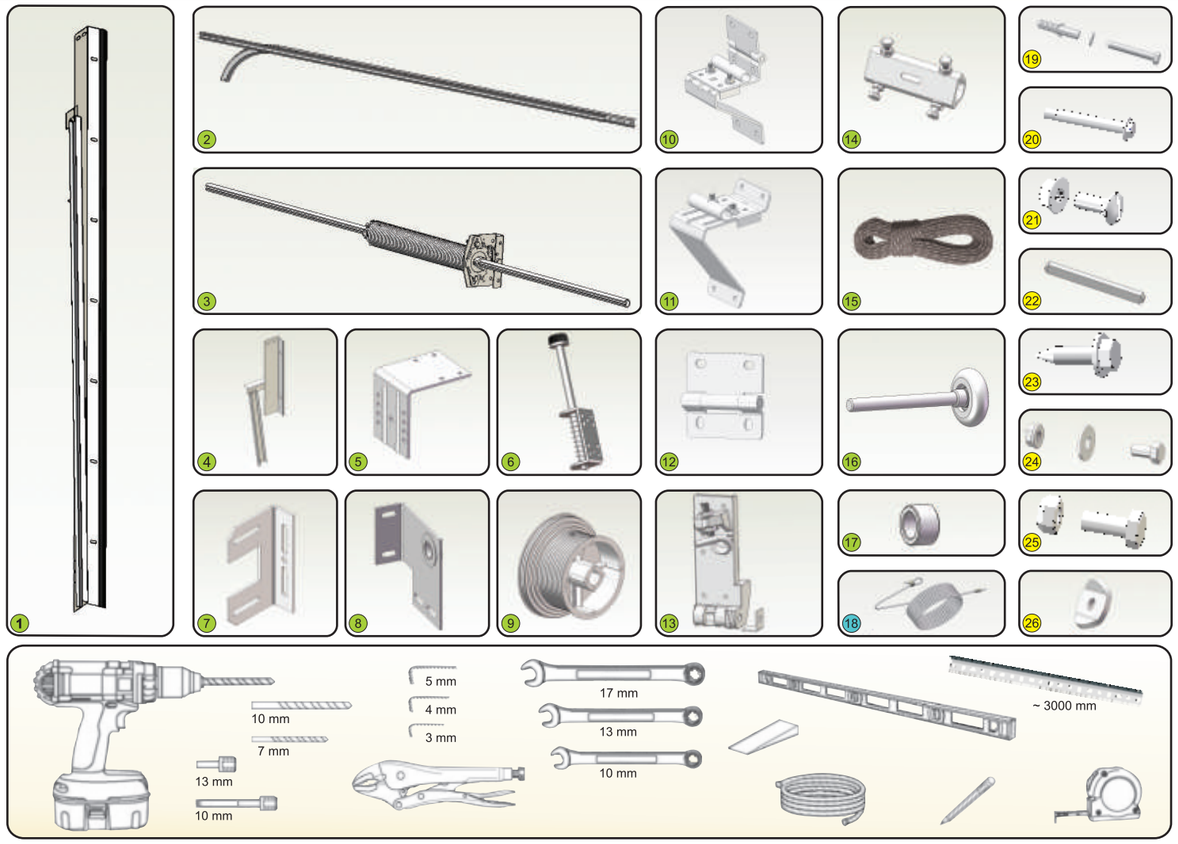

SECTIONAL DOORS ▌TORE ▌VARTAI ▌PORTE ▌BRAMY ▌DEUREN ▌VARTI ▌PORTA ▌
www.standoor.ee • www.standoor.ee • www.standoor.ee • www.standoor.ee • www.standoor.ee • www.standoor.ee • www.standoor.ee • www.standoor.ee • www.standoor.ee • www.standoor.ee

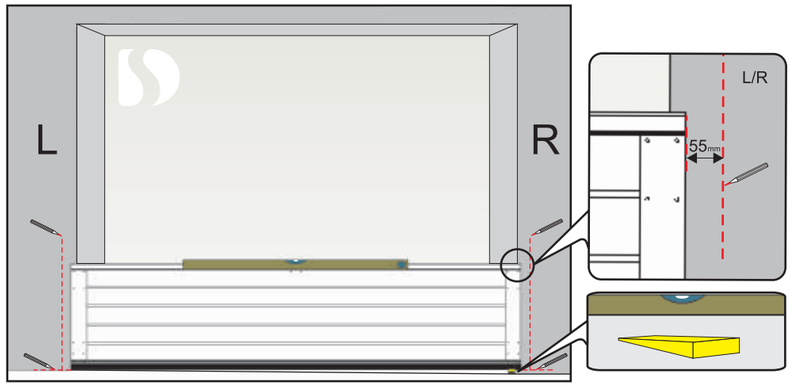
L
R
L/R
55mm

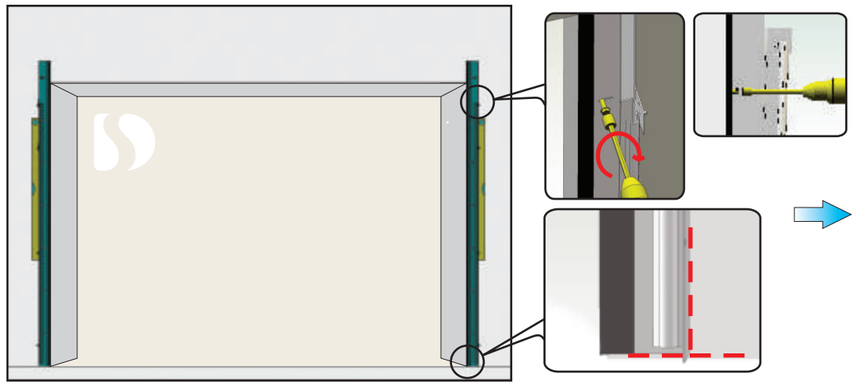

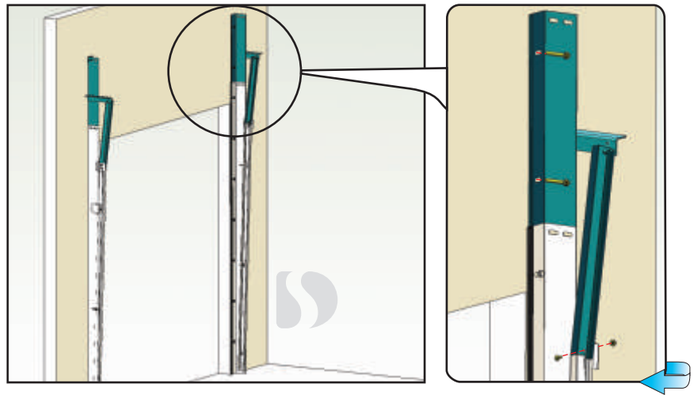

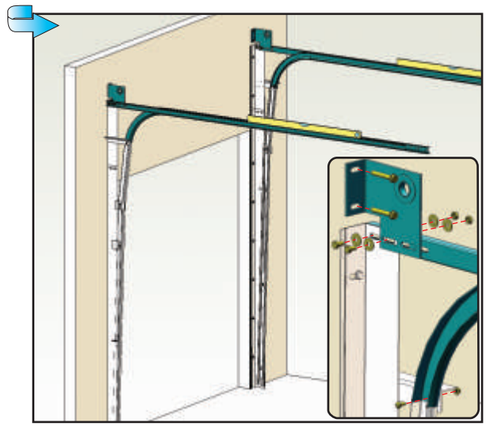

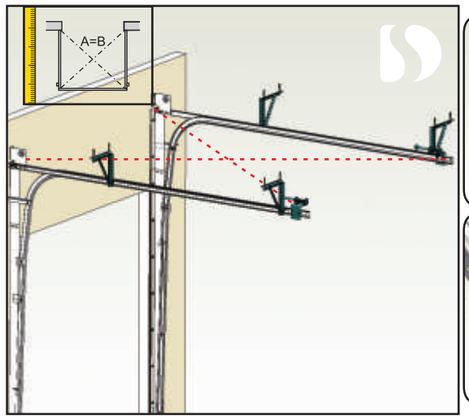
A=B

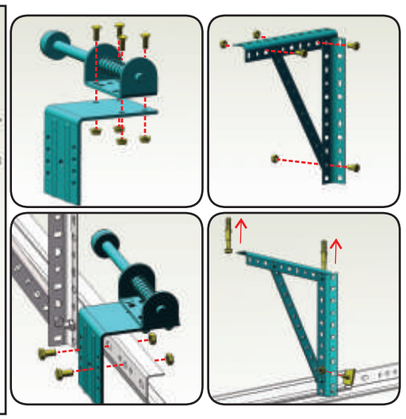

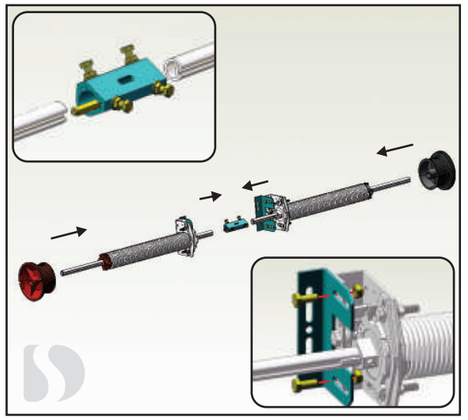

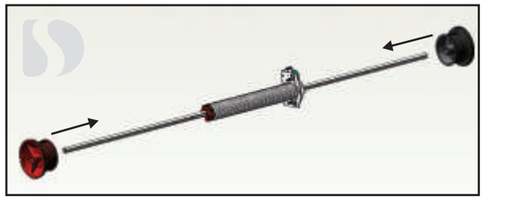

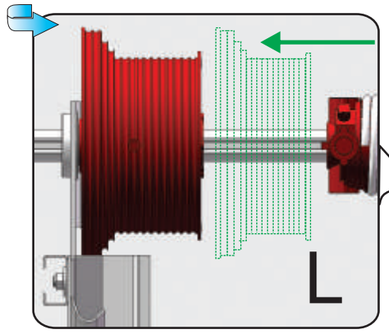
L

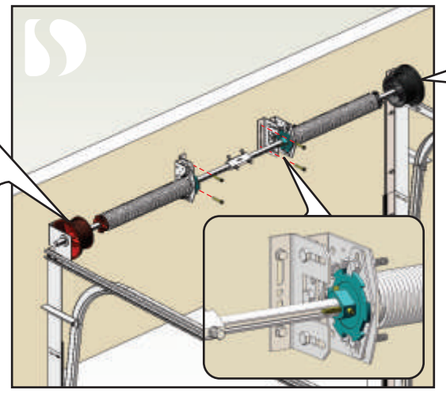

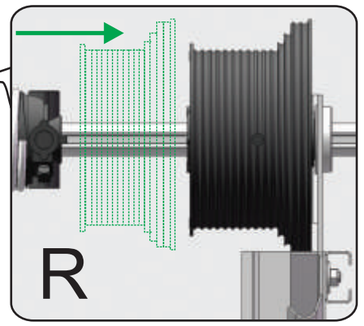
R

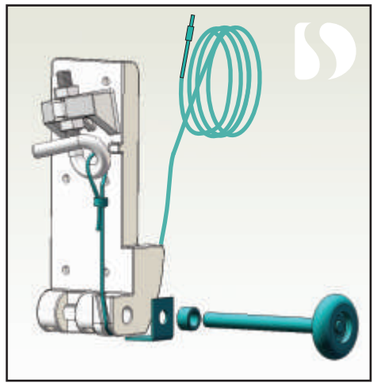

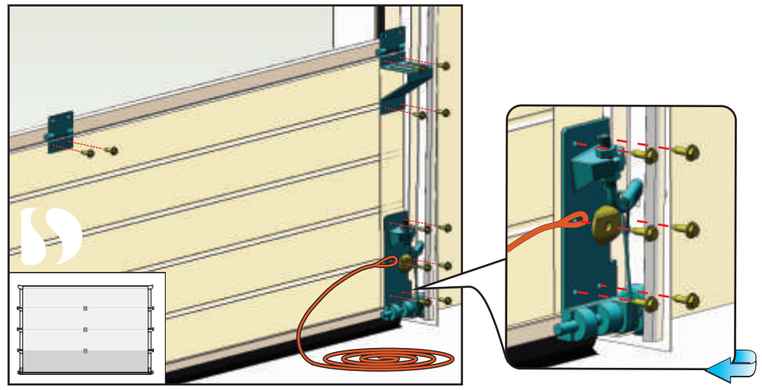

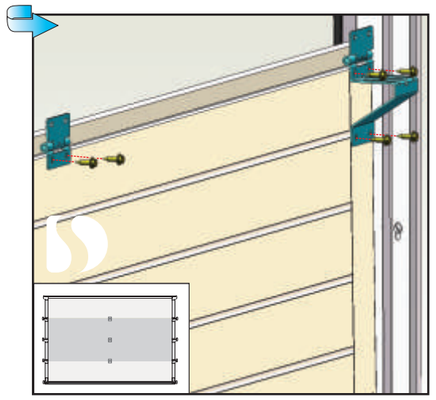

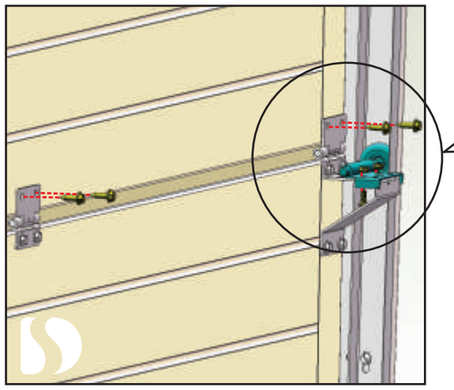

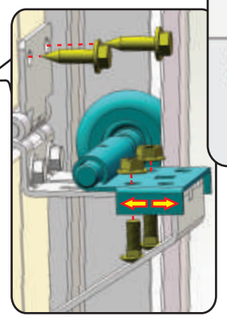

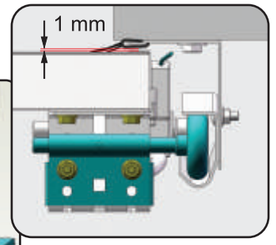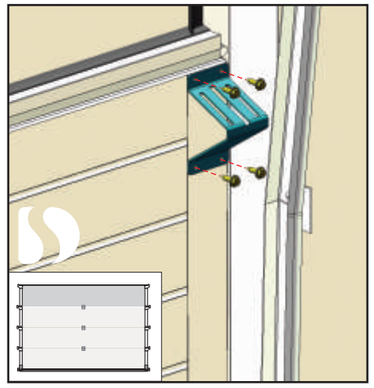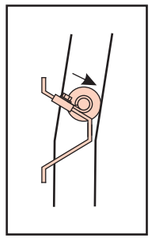
1 mm