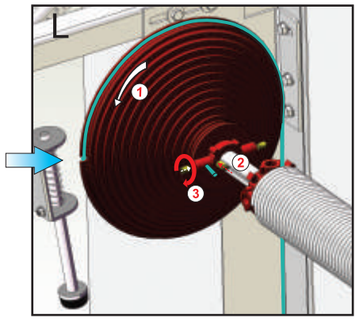

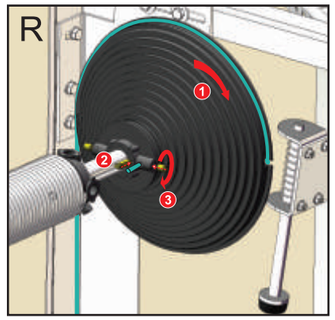

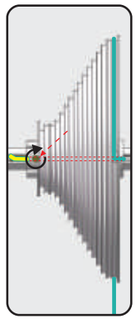

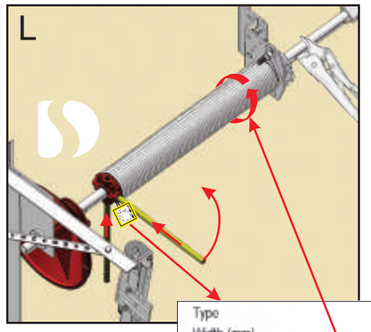

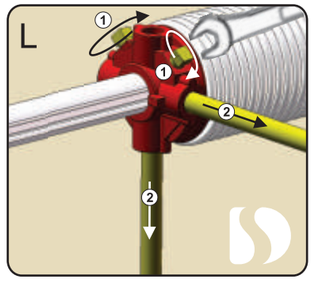

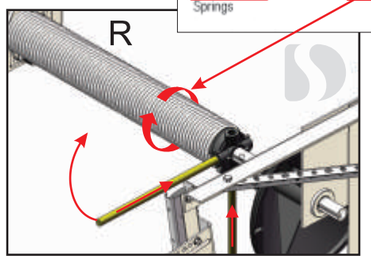

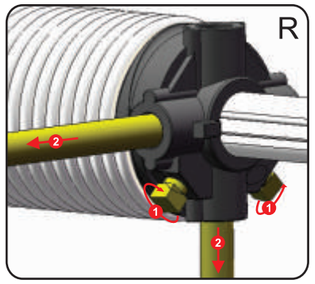

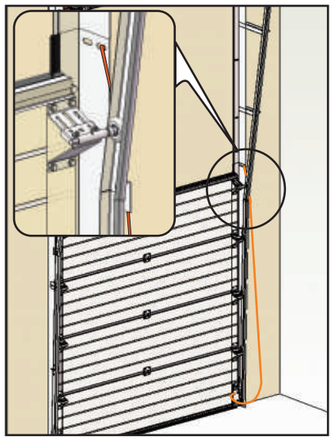

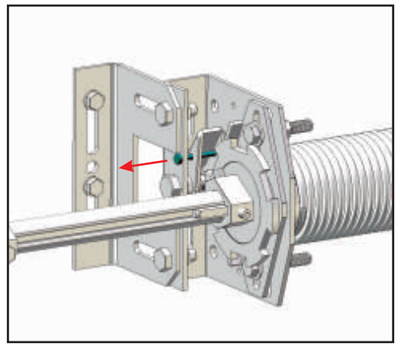

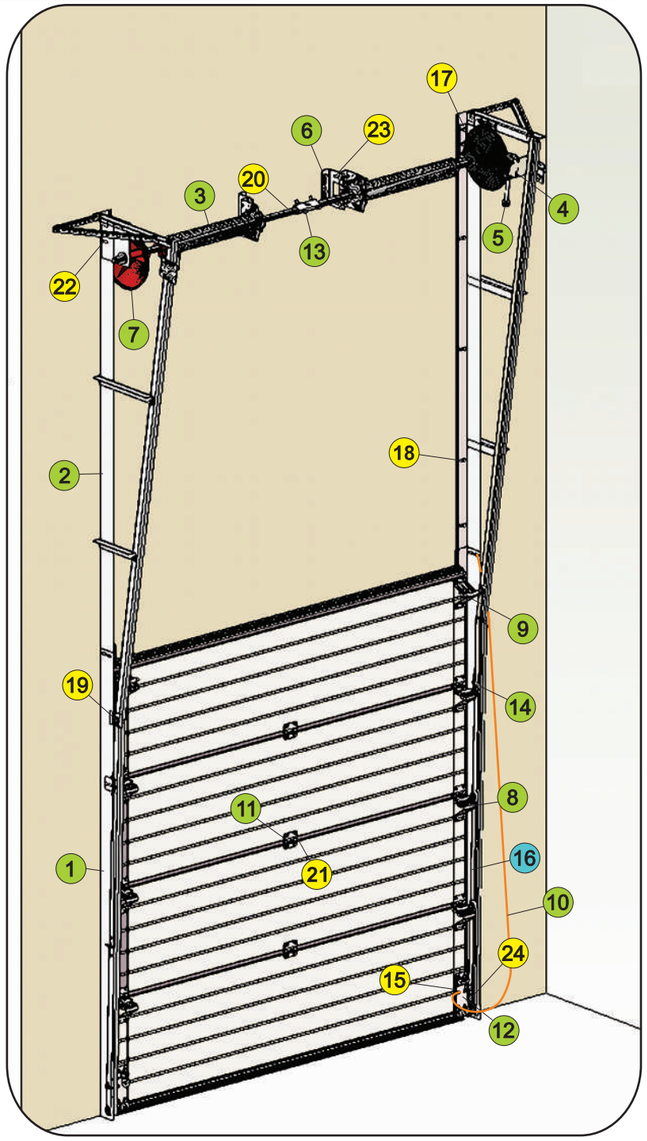

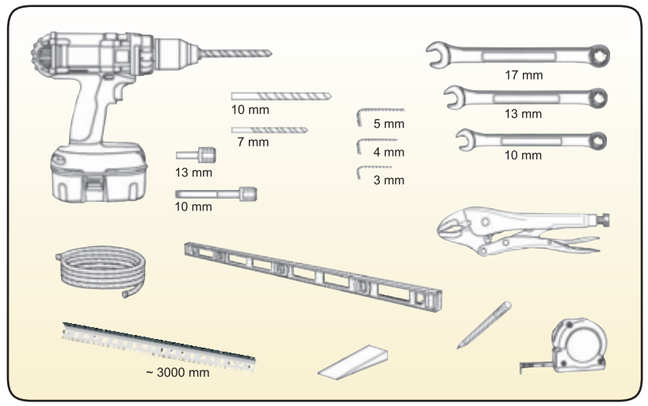

SECTIONAL DOORS TORE VARTAI PORTE BRAMY DEUREN VARTI PORTA
www.standoor.ee • www.standoor.ee • www.standoor.ee • www.standoor.ee • www.standoor.ee • www.standoor.ee • www.standoor.ee • www.standoor.ee • www.standoor.ee • www.standoor.ee

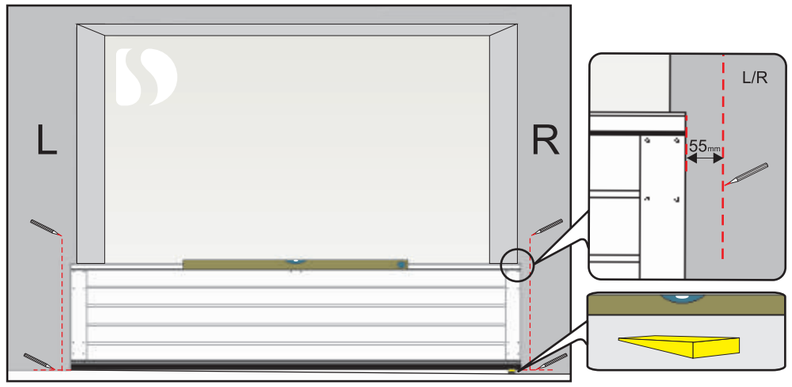
L
R
L/R
55mm

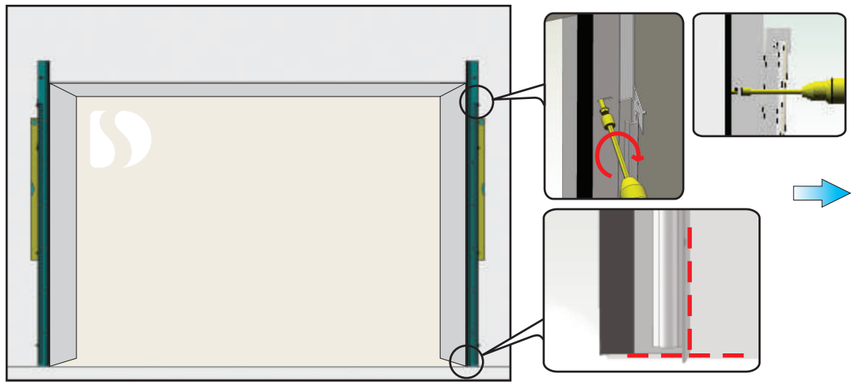

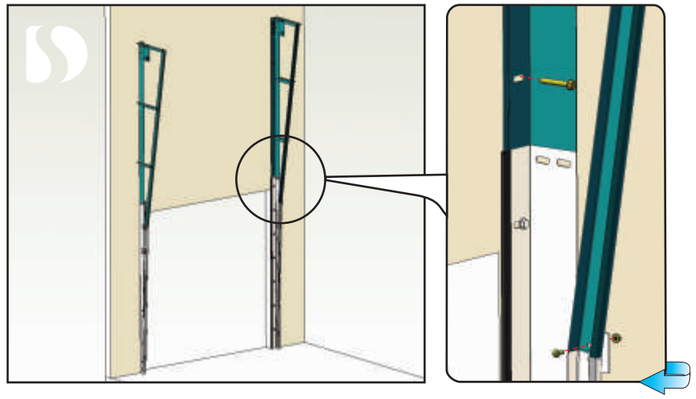

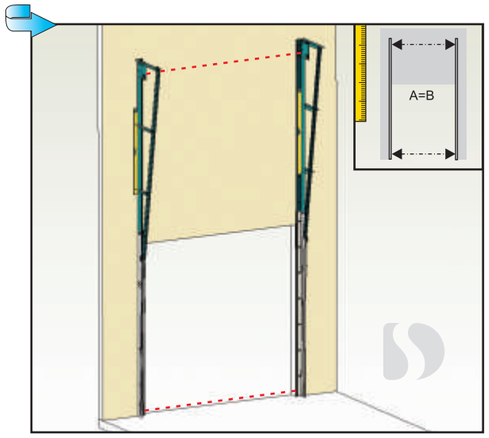
A=B

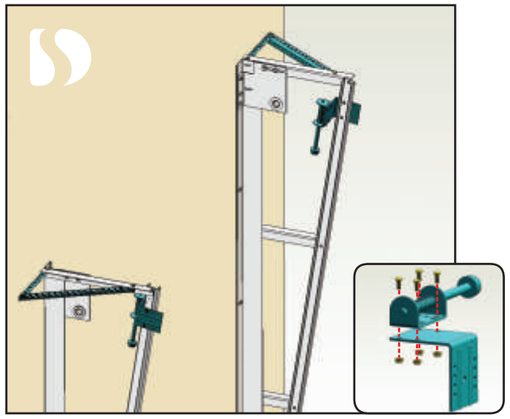

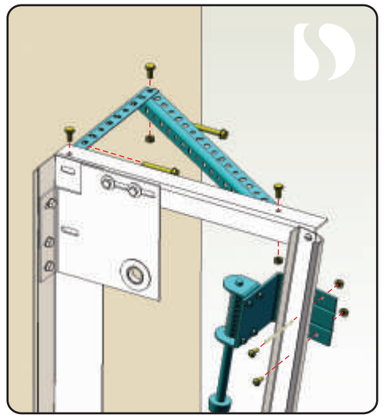

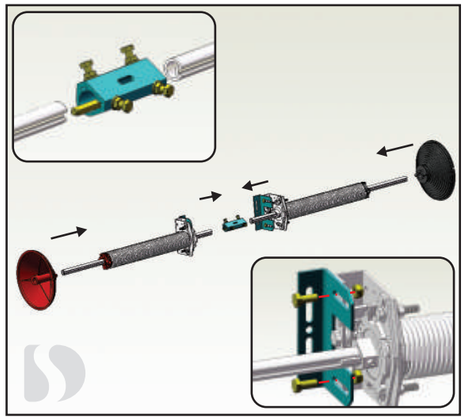

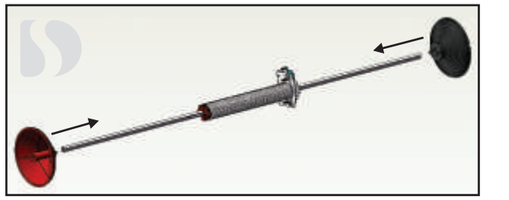

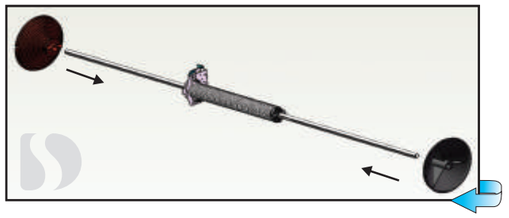

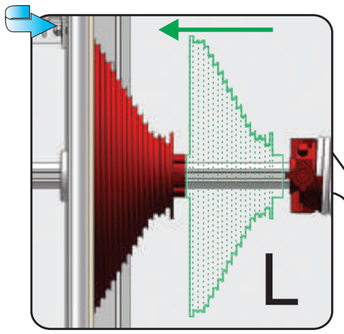
L

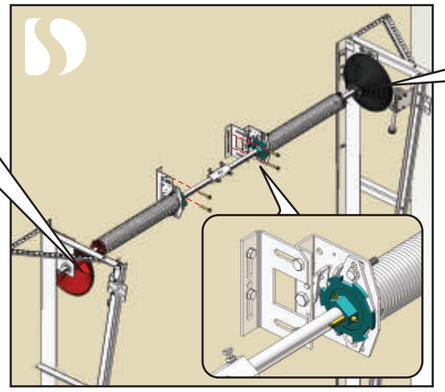

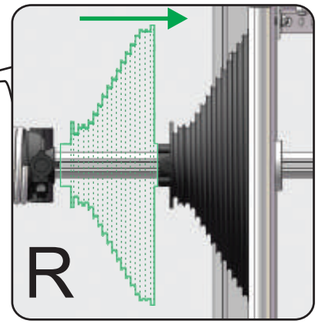
R

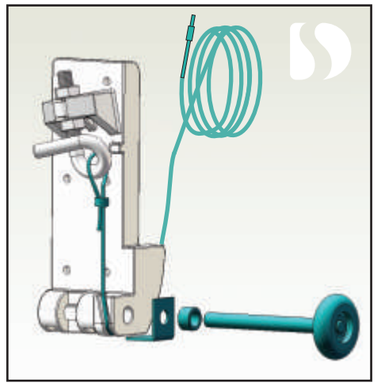

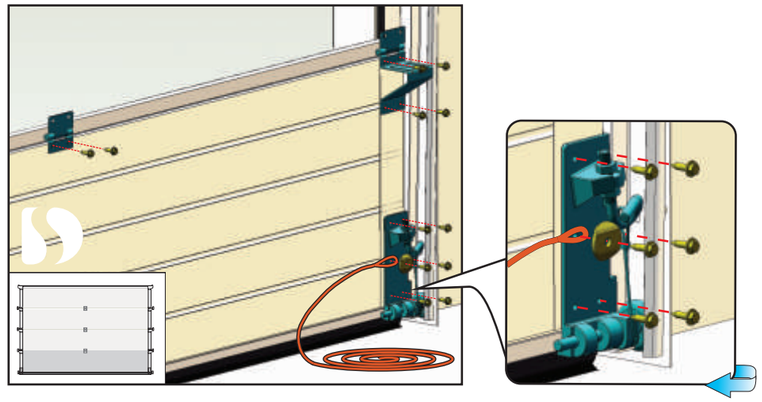

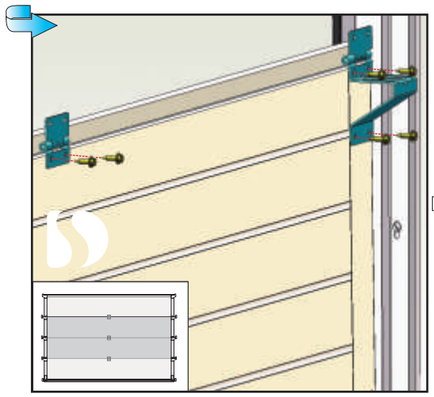

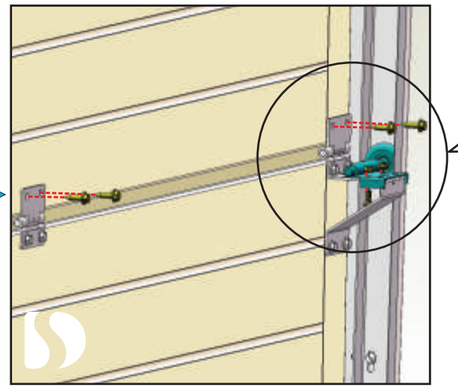

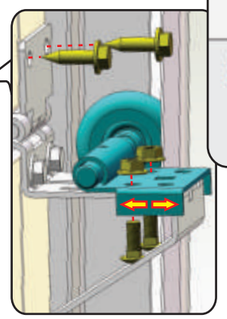

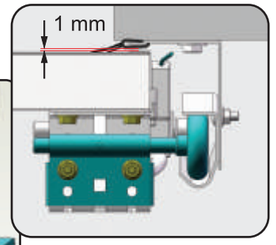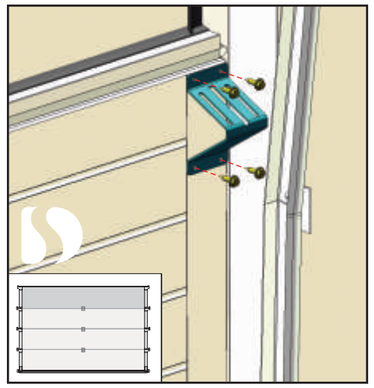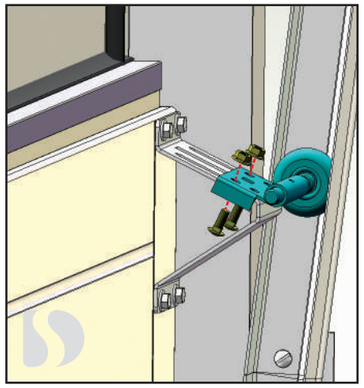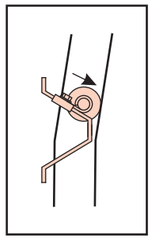
1 mm